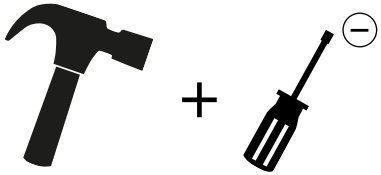

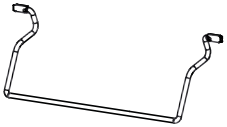

1 x

1 x

560949 © 2016 Copyright by KRAUSE-Werk • D-36304 Alsfeld • Printed in Germany • Subject to technical changes, errores and misprints.

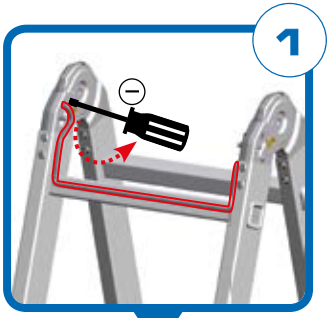
1

2

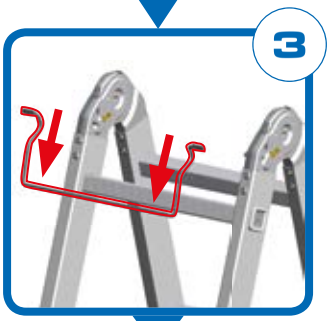
3

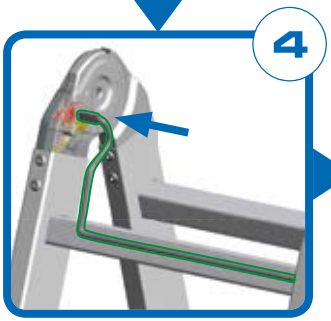
4

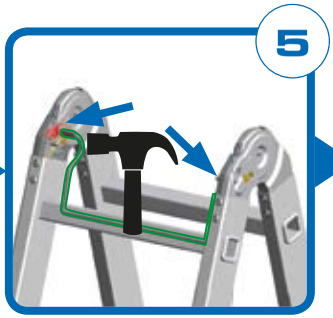
5